asyril experts in mechatronics

PocketDelta

Miniature robot for micro-assembly

PocketDelta

Miniature robot for micro-assembly

The PocketDelta is the ideal solution for rapid displacement or assembly of small-parts. It is one of the fastest and most precise robots in its category and allows up to 3 pick-and-place motions per second. Its repeatability below 5 microns makes it a robot especially well suited for micro-assembly tasks.

TECHNICAL DATA	PocketDelta 100	PocketDelta150
Degrees of freedom:	3 (x,y,z)	3 (x,y,z)
Multi-directional repeatability:	± 2.5 µm (3σ)	± 3.0 µm (3σ)
Workspace:	Ø D: 100 mm	Ø D: 150 mm
	h1: 30 mm	h1: 30 mm
	h2: 89 mm	h2: 105 mm
Cycle-time:	10 g: 0.33 s	10 g: 0.40 s
(path: 30 x 60 x 30 mm)	20 g: 0.50 s	20 g: 0.55 s
	30 g: 0.75 s	30 g: 0.80 s
	40 g: 1.00 s	40 g: 1.10 s
Force in vertical direction (z):	2.5 N	2.0 N

CONTROLLER FEATURES

- Controller integrated above the robot
- Intuitive web-interface
- Jerk limited trajectory generation
- Configurable workspace objects (frames, points, tools)
- Program-editor (text format IEC 61131)

INTERFACES

- Communication: Ethernet, TCP/IP, HTTP
- Digital I/Os: 5 inputs (24 V)
  5 outputs (24 V)
- Power supply: 24 V, 4 A

OPTIONS

- Rotation axis (Rz)
- Embedded vertical compliance module
- Vision-kit
- Tool changer

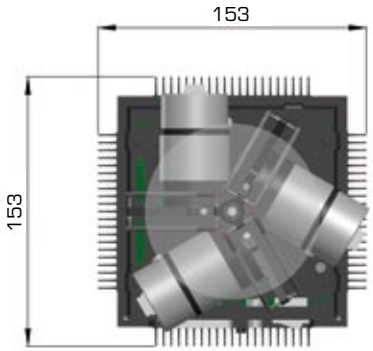

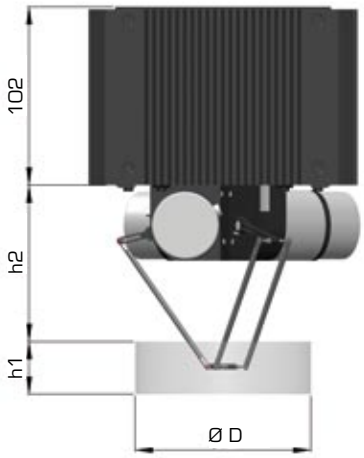

Asyril reserves itself the right to change specifications without notice / Version 4.10-E

asyril sa

z.i. du vivier 16
1690 villaz-st-pierre
switzerland

phone +41 26 653 71 90
fax +41 26 653 71 91
www.asyril.ch

asyril experts in mechatronics